AE420T1, AE419T2,5,8
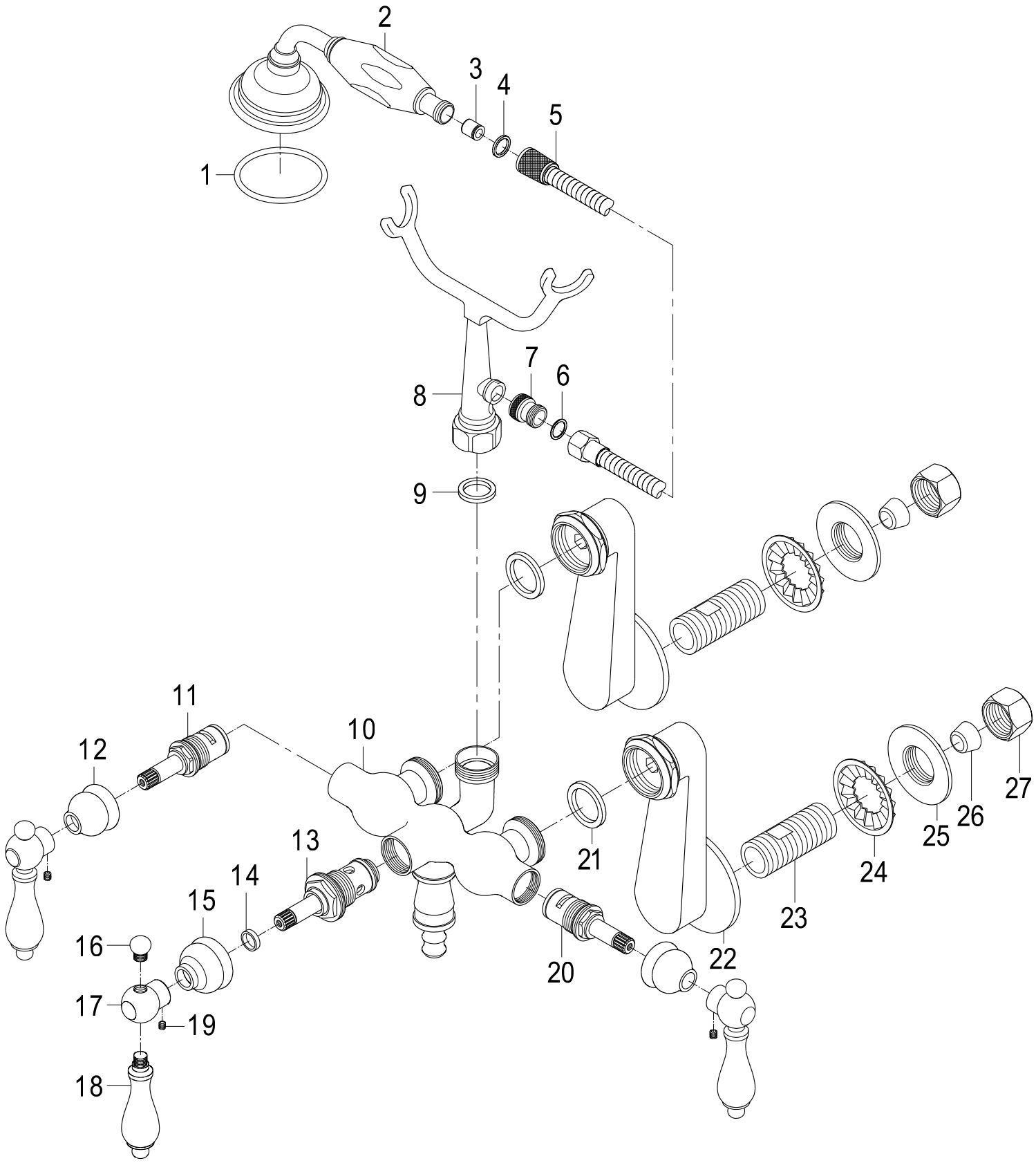
Wall Mount Tub Filler With Hand Shower